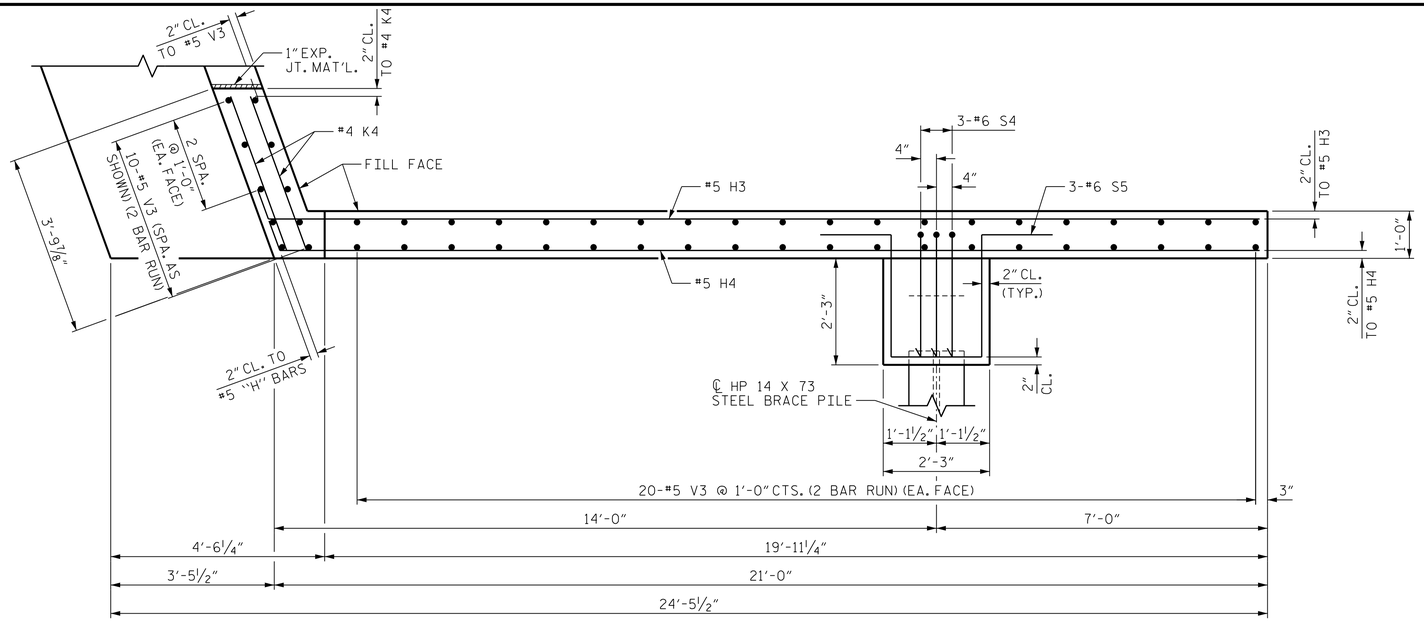

PLAN OF WING (W2)

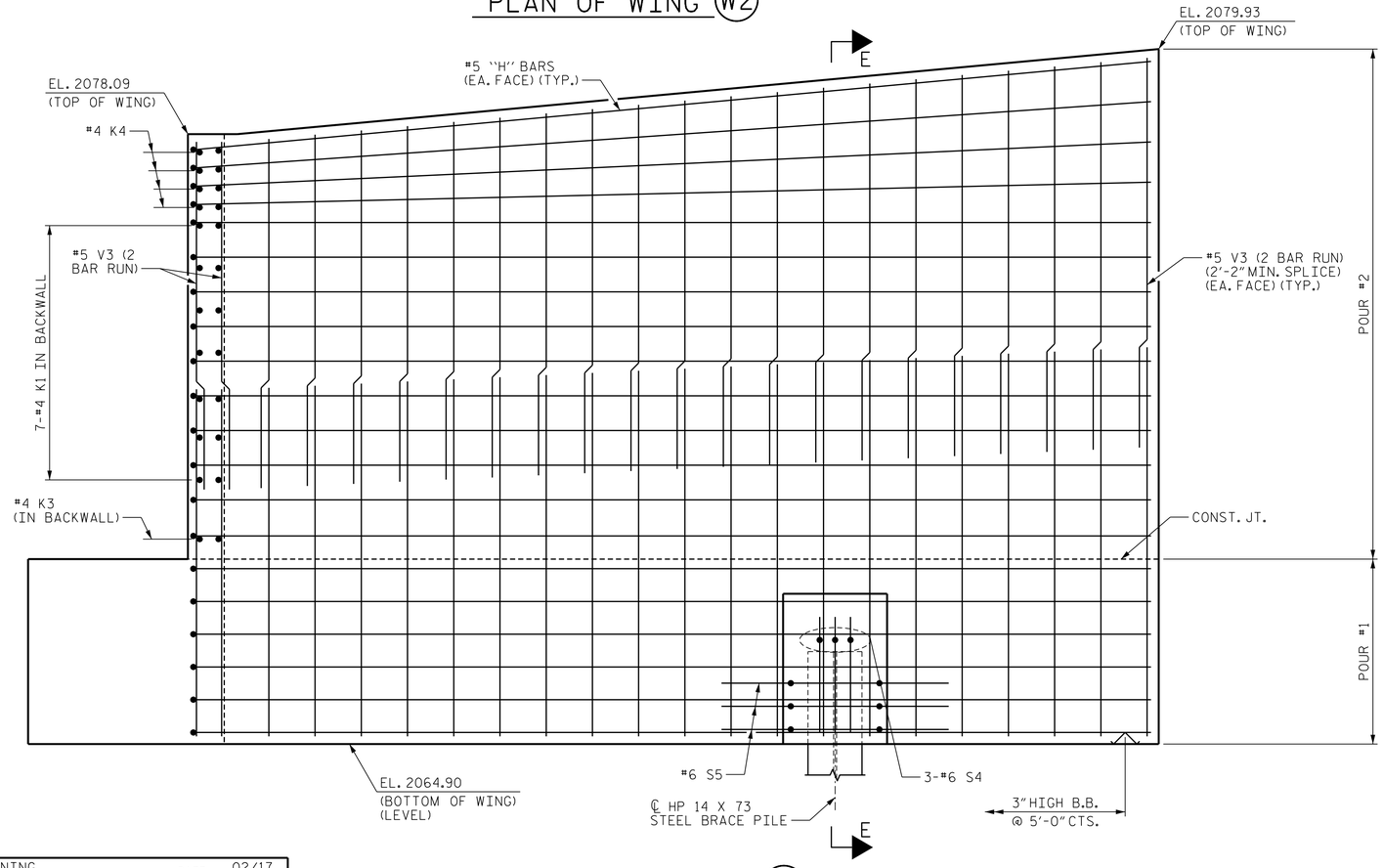

ELEVATION OF WING (W2)

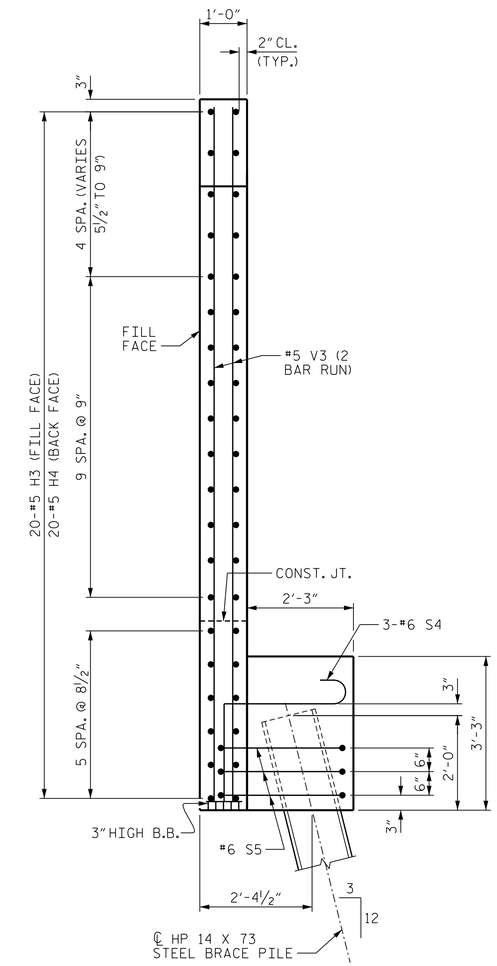

SECTION E-E

PROJECT NO. R-5771

HENDERSON COUNTY

STATION: 20+77.50 -L-

SHEET 3 OF 4

STATE OF NORTH CAROLINA
DEPARTMENT OF TRANSPORTATION
RALEIGH

SUBSTRUCTURE

END BENT 2
WING W2 DETAILS

NORTH CAROLINA PROFESSIONAL SEAL 027799 ENGINEER ALLYSON K. ORR
3/27/2017

DOCUMENT NOT CONSIDERED FINAL UNLESS ALL SIGNATURES COMPLETED

MI ENGINEERING
1011 SCHAUB DRIVE, SUITE 100
RALEIGH, NC 27606
(919) 851-6606
FIRM PE NUMBER : P-0671

REVISIONS								SHEET NO.
NO.	BY:	DATE:	NO.	BY:	DATE:			S-25
1			3					TOTAL SHEETS
2			4					29

DRAWN BY :	B.E. LANNING	DATE :	02/17
CHECKED BY :	A.K. ORR	DATE :	03/17
DESIGN ENGINEER OF RECORD :	A.K. ORR	DATE :	03/17

3/27/2017
2:14:39 PM
User: blanning
Filename: P:\NC Bridges\MI6002.MA.R-5771 Br. Repl. (Div. 14)\R-5771\Structures\401_049_R5771_SMU_E2C.dgn