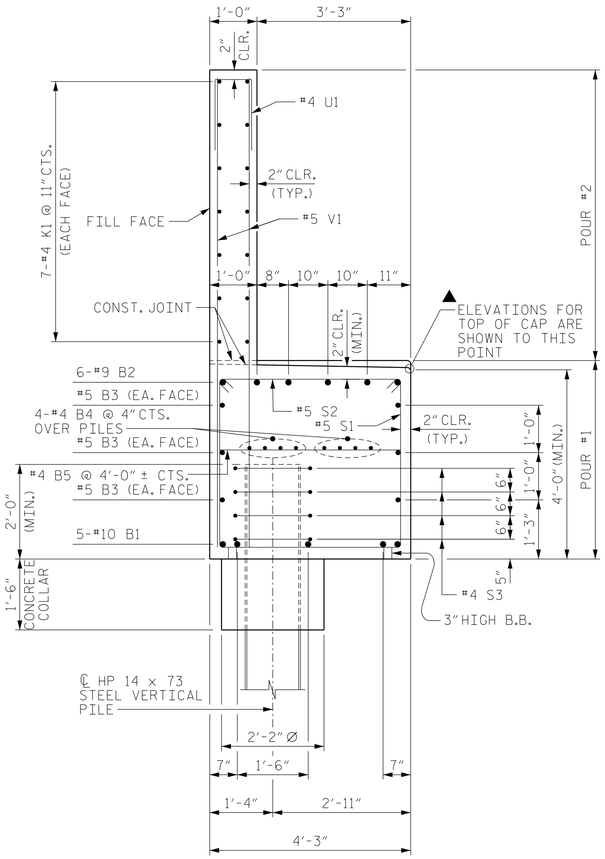

SECTION A-A

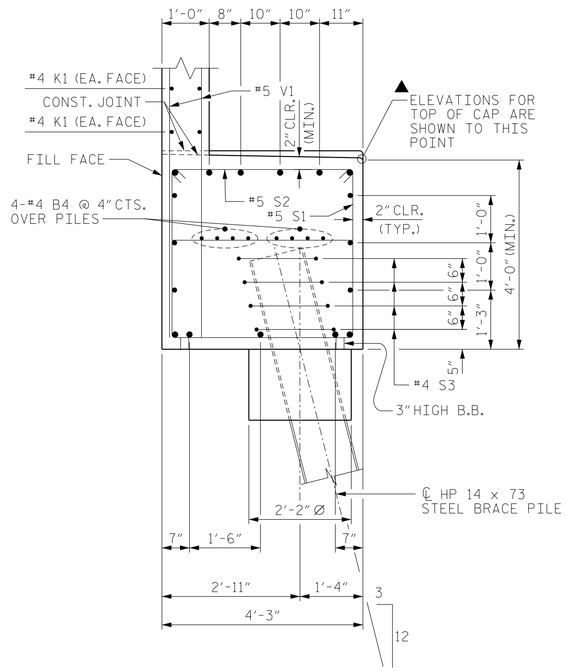

SECTION B-B

FOR ADDITIONAL BARS AND DIMENSIONS, SEE SECTION A-A

BAR TYPES

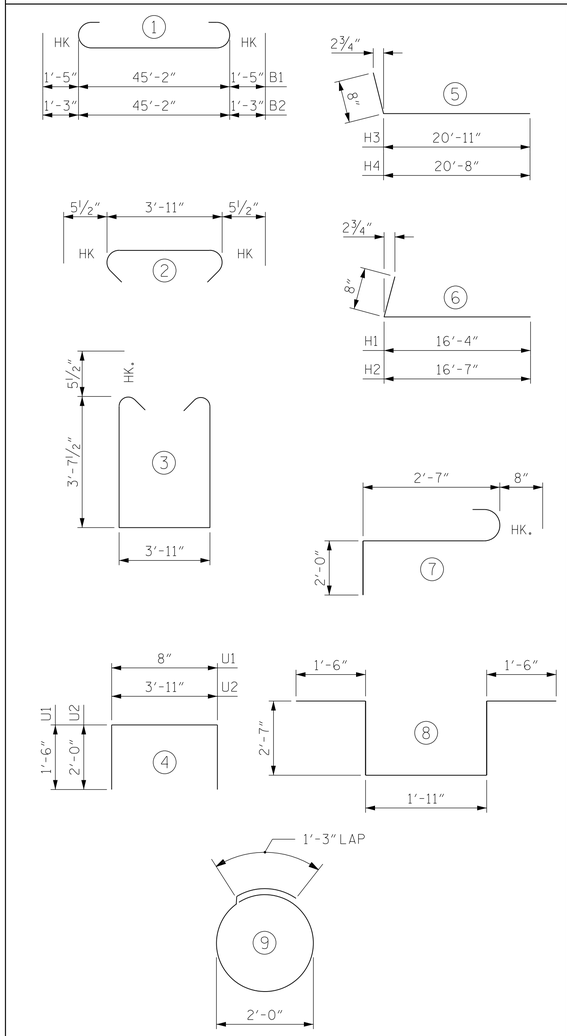

ALL BAR DIMENSIONS ARE OUT TO OUT.

BILL OF MATERIAL

END BENT 2

BAR	NO.	SIZE	TYPE	LENGTH	WEIGHT
B1	5	#10	1	48'-0"	1033
B2	6	#9	1	47'-8"	972
B3	6	#5	STR	45'-2"	283
B4	16	#4	STR	23'-10"	255
B5	11	#4	STR	3'-11"	29
B6	18	#4	STR	3'-2"	38
H1	15	#4	6	17'-0"	170
H2	15	#4	6	17'-3"	173
H3	20	#5	5	21'-7"	450
H4	20	#5	5	21'-4"	445
K1	28	#4	STR	23'-10"	446
K2	4	#4	STR	6'-9"	18
K3	2	#4	STR	5'-6"	7
K4	14	#4	STR	3'-5"	32
S1	42	#5	3	12'-1"	529
S2	42	#5	2	4'-10"	212
S3	36	#4	9	7'-6"	180
S4	6	#6	7	5'-3"	47
S5	6	#6	8	10'-1"	91
U1	38	#4	4	3'-8"	93
U2	12	#4	4	7'-11"	63
V1	76	#5	STR	10'-0"	793
V2	84	#5	STR	7'-8"	672
V3	100	#5	STR	8'-6"	887
REINFORCING STEEL					7918 LBS.

CLASS A CONCRETE BREAKDOWN	
POUR #1 (CAP & LOWER PART OF WINGS)	39.0 C.Y.
POUR #2 (BACKWALL & UPPER PART OF WINGS)	24.5 C.Y.
TOTAL	63.5 C.Y.

HP 14 X 73 STEEL PILES	NO.: 11 517.0 LIN. FT.
PILE DRIVING EQUIPMENT SETUP FOR HP 14 X 73 STEEL PILES	EA. 11

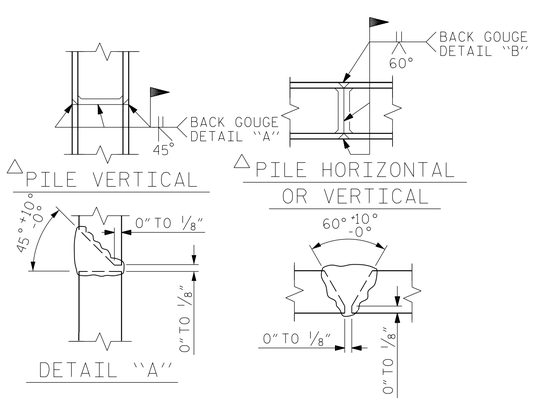

POSITION OF PILE DURING WELDING.

PILE SPLICE DETAILS

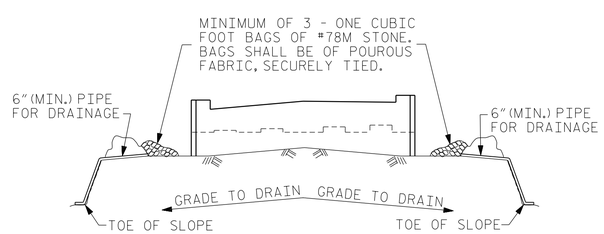

BAGGED STONE AND PIPE SHALL BE PLACED IMMEDIATELY AFTER COMPLETION OF END BENT EXCAVATION. PIPE MAY BE EITHER CONCRETE, CORRUGATED STEEL, CORRUGATED ALUMINUM ALLOY, OR CORRUGATED PLASTIC. PERFORATED PIPE WILL NOT BE ALLOWED.

BAGGED STONE SHALL REMAIN IN PLACE UNTIL THE ENGINEER DIRECTS THAT IT BE REMOVED. THE CONTRACTOR SHALL REMOVE AND DISPOSE OF SILT ACCUMULATIONS AT BAGGED STONE WHEN SO DIRECTED BY THE ENGINEER. BAGS SHALL BE REMOVED AND REPLACED WHENEVER THE ENGINEER DETERMINES THAT THEY HAVE DETERIORATED AND LOST THEIR EFFECTIVENESS.

NO SEPARATE PAYMENT WILL BE MADE FOR THIS WORK AND THE ENTIRE COST OF THIS WORK SHALL BE INCLUDED IN THE UNIT CONTRACT PRICE BID FOR THE SEVERAL PAY ITEMS.

TEMPORARY DRAINAGE AT END BENT

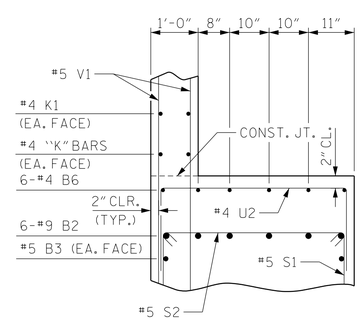

SECTION C-C

PROJECT NO. R-5771

HENDERSON COUNTY

STATION: 20+77.50 -L-

SHEET 4 OF 4

STATE OF NORTH CAROLINA
DEPARTMENT OF TRANSPORTATION
RALEIGH

SUBSTRUCTURE

END BENT 2 DETAILS AND BILL OF MATERIAL

DOCUMENT NOT CONSIDERED FINAL UNLESS ALL SIGNATURES COMPLETED

MI ENGINEERING
1011 SCHAUB DRIVE, SUITE 100
RALEIGH, NC 27606
(919) 851-6606
FIRM PE NUMBER : P-0671

REVISIONS								SHEET NO.
NO.	BY:	DATE:	NO.	BY:	DATE:			S-26
1			3					TOTAL SHEETS
2			4					29

DRAWN BY :	B.E. LANNING	DATE :	02/17
CHECKED BY :	A.K. ORR	DATE :	03/17
DESIGN ENGINEER OF RECORD :	A.K. ORR	DATE :	03/17

3/28/2017
11:11:41 AM
User: blanning
Filename: P:\NC Bridges\MI6002_MA_R-5771 Br. Repl. (Div. 14)\R-5771\Structures\401_051_R5771_SMU_E2D.dgn