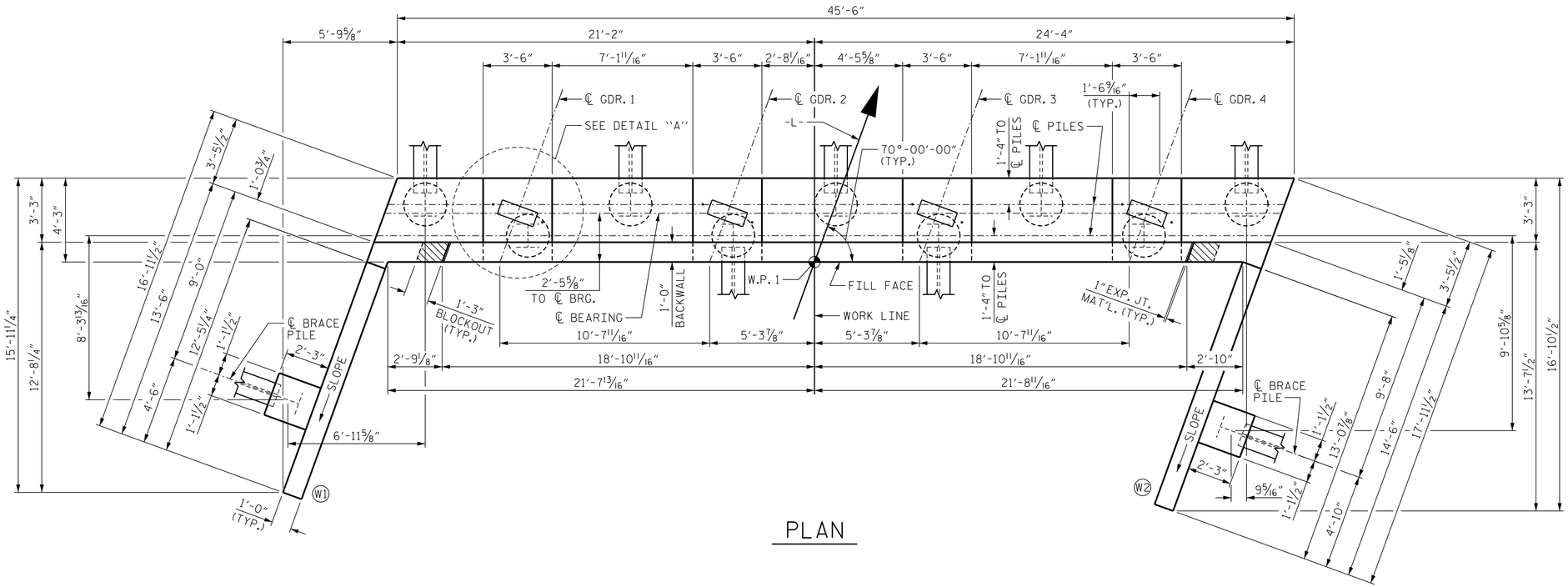

PLAN

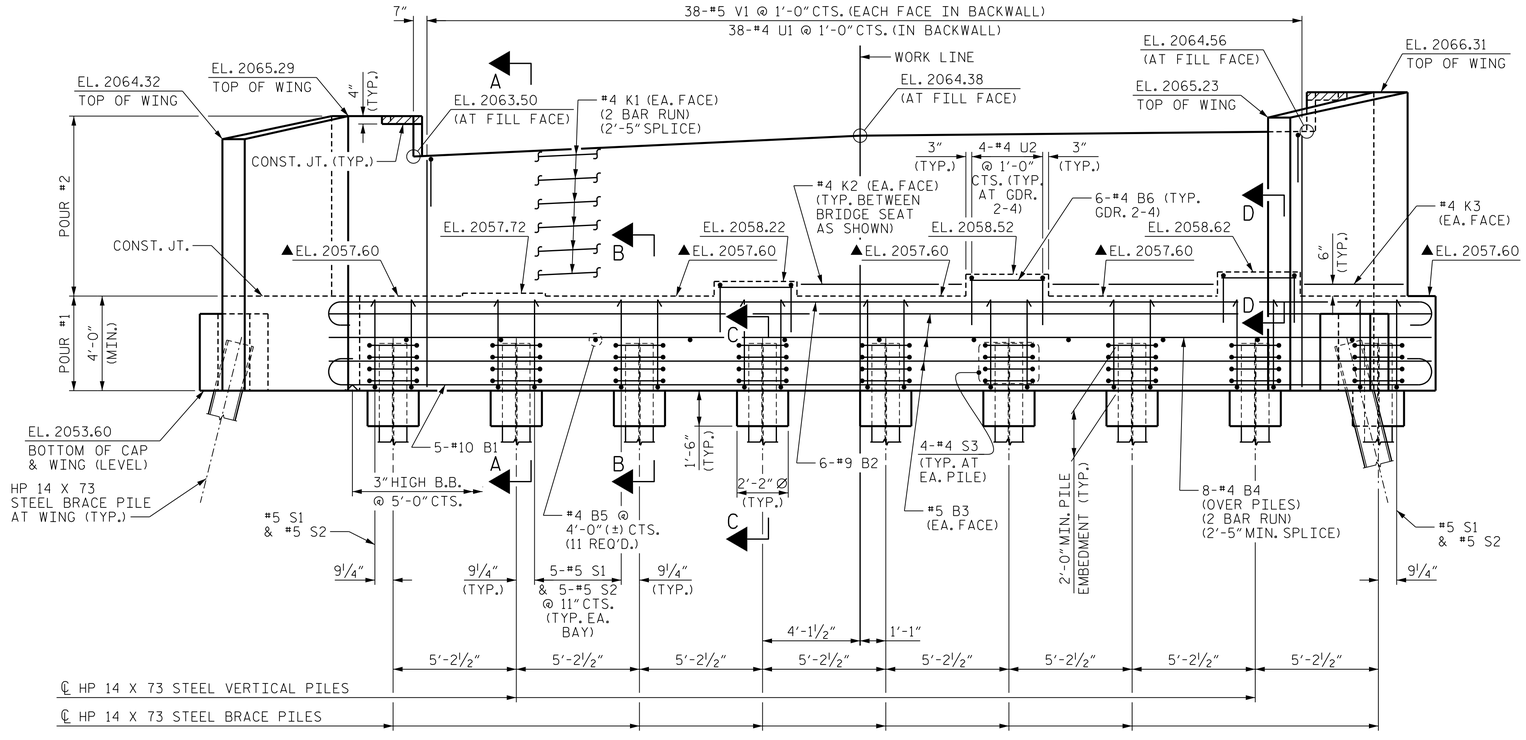

ELEVATION

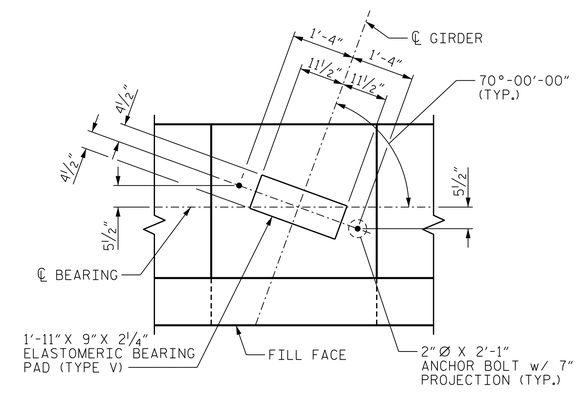

DETAIL "A"

NOTES

STIRRUPS AND #4 U2 BARS IN CAP MAY BE SHIFTED AS NECESSARY TO CLEAR ANCHOR BOLTS.

#5 V1 BARS IN BACKWALL SHALL BE PLACED 2" CLEAR FROM THE TOP OF THE BACKWALL.

BACKWALL SHALL BE PLACED BEFORE APPLYING THE EPOXY PROTECTIVE COATING.

THE TOP SURFACE AREAS OF THE END BENT CAP SHALL BE CURED IN ACCORDANCE WITH THE STANDARD SPECIFICATIONS EXCEPT THAT THE MEMBRANE CURING COMPOUND METHOD SHALL NOT BE USED.

THE TOP SURFACE OF THE CAP EXCEPT THE BRIDGE SEAT BUILDUPS SHALL BE SLOPED TRANSVERSELY FROM THE FILL FACE TO THE BACK FACE AT THE RATE OF 2%.

▲ FOR LOCATION OF ELEVATIONS BETWEEN BRIDGE SEAT BUILD-UPS, SEE SECTION A-A ON SHEET 3 OF 3.

THE CONCRETE IN THE SHADED AREA OF THE WING SHALL BE POURED AFTER THE BARRIER RAIL IS CAST IF SLIP FORMING IS USED.

FOR SECTION A-A, SECTION B-B, SECTION C-C AND SECTION D-D, SEE SHEET 3 OF 3.

FOR PILE SPLICE DETAILS AND TEMPORARY DRAINAGE DETAILS, SEE END BENT 2 SHEET 4 OF 4.

INSTALL THE 4" DIA. DRAIN PIPE THROUGH THE WING WALL AS REQUIRED FOR REINFORCED BRIDGE APPROACH FILLS, SEE THE ROADWAY PLANS. REINFORCING STEEL IN THE WING WALL MAY BE SHIFTED AS NECESSARY TO CLEAR THE DRAIN PIPE.

PROJECT NO. R-5771
HENDERSON COUNTY
STATION: 20+77.50 -L-

SHEET 1 OF 3

STATE OF NORTH CAROLINA
DEPARTMENT OF TRANSPORTATION
RALEIGH

SUBSTRUCTURE
END BENT 1
PLAN AND ELEVATION

NORTH CAROLINA PROFESSIONAL ENGINEER SEAL 027799 ALLYSON K. ORR
3/27/2017

DOCUMENT NOT CONSIDERED FINAL UNLESS ALL SIGNATURES COMPLETED

MI ENGINEERING
1011 SCHAUB DRIVE, SUITE 100
RALEIGH, NC 27606
(919) 851-6606
FIRM PE NUMBER : P-0671

REVISIONS						
NO.	BY:	DATE:	NO.	BY:	DATE:	
1			3			
2			4			

SHEET NO. S-20
TOTAL SHEETS 29

DRAWN BY : B.E. LANNING DATE : 02/17
CHECKED BY : A.K. ORR DATE : 02/17
DESIGN ENGINEER OF RECORD : A.K. ORR DATE : 03/17

3/27/2017
2:14:28 PM
User: blanning
Filename: P:\NC Bridges\MI6002_MA_R-5771 Br. Repl. (Div. 14)\R-5771\Structures\401_039_R5771_SMU_E1A.dgn