NOTES :

FOR BERM WIDTH DIMENSIONS, SEE GENERAL DRAWING.

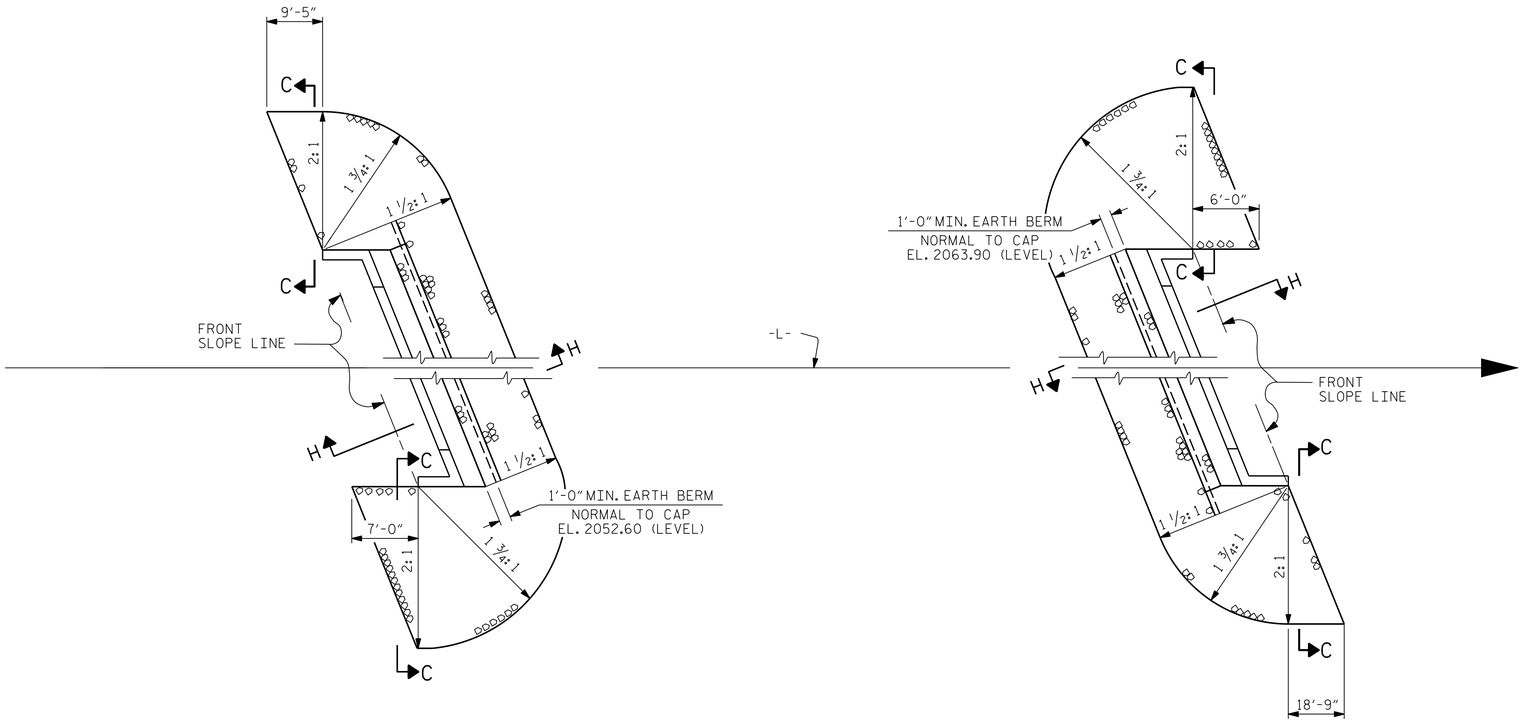

END BENT 1

END BENT 2

PLAN

ESTIMATED QUANTITIES		
BRIDGE @ STA. 20+77.50 -L-	RIP RAP CLASS II (2'-0" THICK)	GEOTEXTILE FOR DRAINAGE
	TONS	SQUARE YARDS
END BENT 1	248	275
END BENT 2	630	700

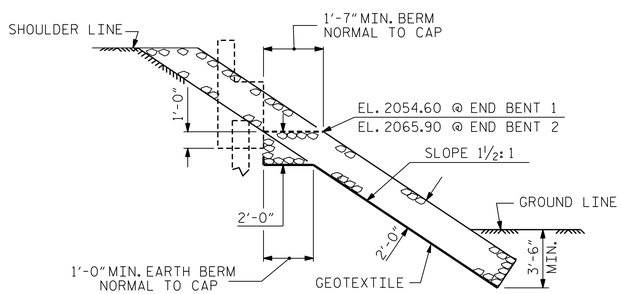

SECTION H-H

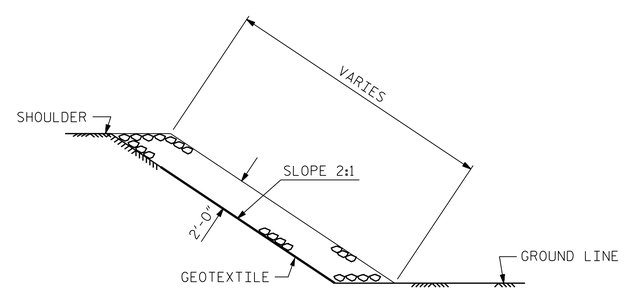

SECTION C-C

PROJECT NO. R-5771

HENDERSON COUNTY

STATION: 20+77.50 -L-

STATE OF NORTH CAROLINA
DEPARTMENT OF TRANSPORTATION
RALEIGH

RIP RAP DETAILS

NORTH CAROLINA PROFESSIONAL SEAL 027799 ENGINEER ALLYSON K. ORR
3/27/2017

DOCUMENT NOT CONSIDERED FINAL UNLESS ALL SIGNATURES COMPLETED

MI ENGINEERING
1011 SCHAUB DRIVE, SUITE 100
RALEIGH, NC 27606
(919) 851-6606
FIRM PE NUMBER : P-0671

REVISIONS							
NO.	BY:	DATE:	NO.	BY:	DATE:	SHEET NO.	
1			3			S-27	
2			4			TOTAL SHEETS	
						29	

DRAWN BY :	B.E. ATKINSON	DATE :	03/17
CHECKED BY :	A.K. ORR	DATE :	03/17
DESIGN ENGINEER OF RECORD :	A.K. ORR	DATE :	03/17

3/27/2017
2:14:44 PM
User: blanning
Filename: P:\NC Bridges\M16002_MA_R-5771 Br. Repl. (Div. 14)\R-5771\Structures\401_053_R5771_SMU_RR1.dgn