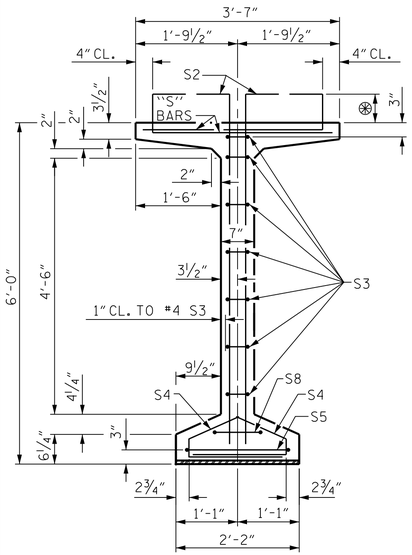

SECTION A-A

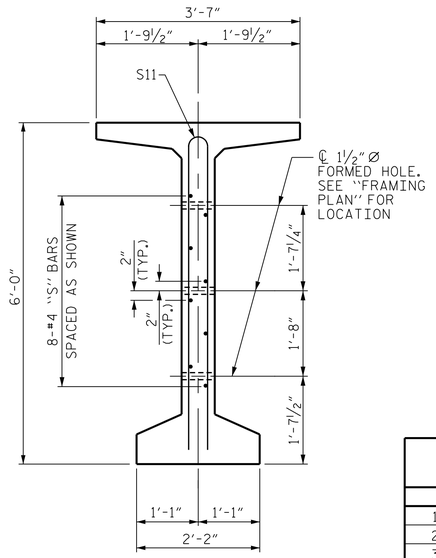

SECTION C-C

(S1, "S" AND S9 BARS NOT SHOWN)

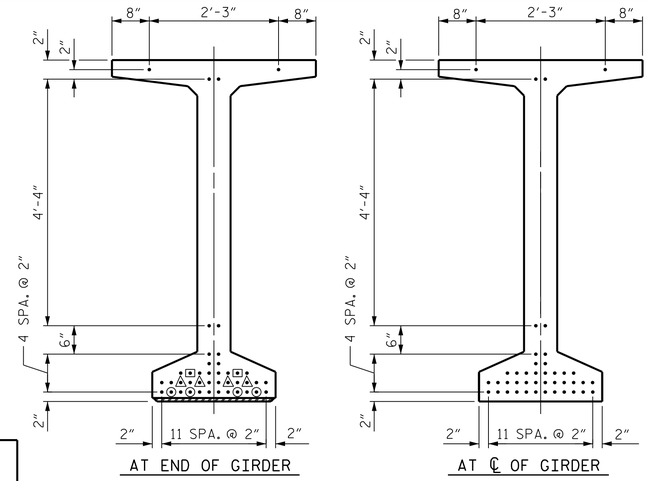

0.6" Ø LOW RELAXATION STRAND LAYOUT

DEBONDING LEGEND

- ● FULLY BONDED STRANDS
- ▣ STRANDS DEBONDED FOR 4'-0" FROM END OF GIRDER
- ◬ STRANDS DEBONDED FOR 6'-0" FROM END OF GIRDER
- ◉ STRANDS DEBONDED FOR 12'-0" FROM END OF GIRDER

GIRDER DIMENSIONS	A	B
1	126'-11⅛"	9 1/16"
2	126'-11⅛"	9 1/16"
3	126'-11¼"	9⅛"
4	126'-11¼"	9⅛"

0.6" Ø L.R. GRADE 270 STRANDS		
AREA (SQUARE INCHES)	ULTIMATE STRENGTH (LBS. PER STRAND)	APPLIED PRESTRESS (LBS. PER STRAND)
0.217	58,600	43,950

REINFORCING STEEL FOR GDR G1

BAR	NUMBER	SIZE	TYPE	LENGTH	WEIGHT
S1	168	#4	1	6'-10"	767
S2	36	#5	1	6'-10"	257
S3	14	#4	2	8'-5"	79
S4	56	#4	3	3'-0"	112
S5	2	#5	2	9'-10"	21
S8	2	#5	2	9'-0"	19
S9	57	#5	STR	3'-3"	193
S11	8	#5	5	11'-6"	96
S12	16	#4	STR	8'-0"	86
S61	72	#5	4	4'-7"	344
S62	44	#5	4	4'-6"	207
S64	88	#5	4	4'-5"	405

REINFORCING STEEL FOR ONE GDR G2 - G4

BAR	NUMBER	SIZE	TYPE	LENGTH	WEIGHT
S1	168	#4	1	6'-10"	767
S2	36	#5	1	6'-10"	257
S3	14	#4	2	8'-5"	79
S4	56	#4	3	3'-0"	112
S5	2	#5	2	9'-10"	21
S8	2	#5	2	9'-0"	19
S9	57	#5	STR	3'-3"	193
S11	8	#5	5	11'-6"	96
S12	16	#4	STR	8'-0"	86
S61	72	#5	4	4'-7"	344
S62	56	#5	4	4'-6"	263
S63	76	#5	4	4'-5"	350

TYPE 4 DIMENSIONS	*	**
S61	10¾"	3'-0¼"
S62	9¾"	3'-0¼"
S63	8¾"	3'-0¼"
S64	8½"	3'-0½"

BAR TYPES

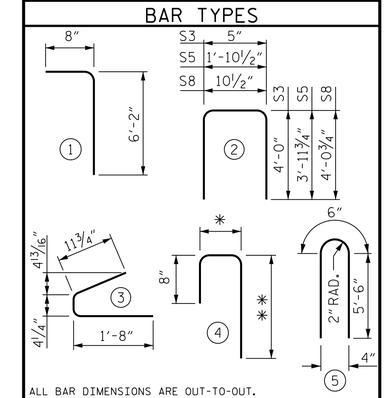

QUANTITIES FOR ONE GIRDER	REINFORCING STEEL	9000 PSI CONCRETE	0.6" Ø L.R. STRANDS
	LB.	C.Y.	No.
G1	2586	27.2	42
G2-G4	2587	27.2	42

GIRDERS REQUIRED		
NUMBER	LENGTH	TOTAL LENGTH
2	126'-11⅛"	253'-10¼"
2	126'-11¼"	253'-10½"

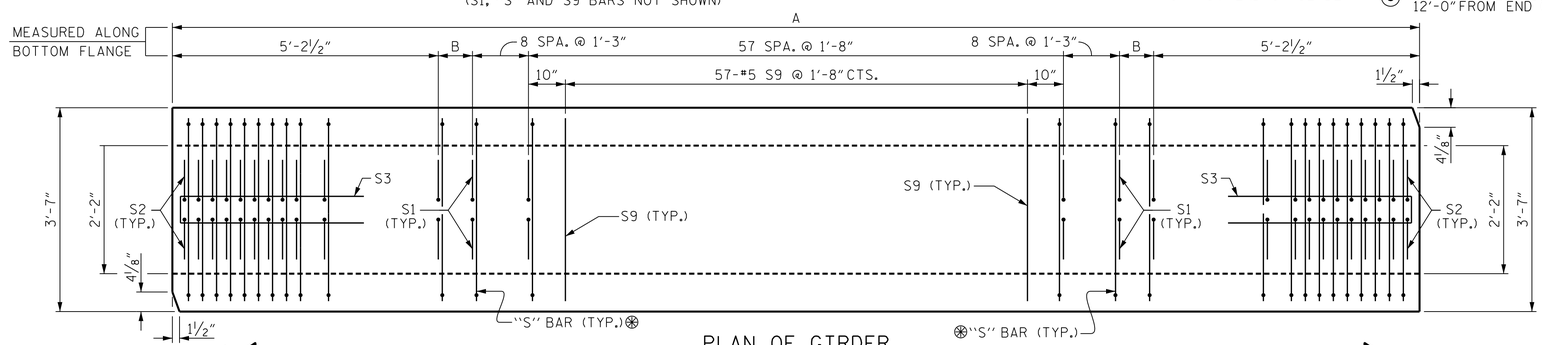

PLAN OF GIRDER

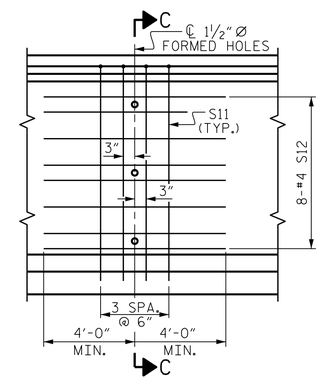

PARTIAL ELEVATION

SHOWING INTERMEDIATE STEEL DIAPHRAGM REINFORCING STEEL FOR GIRDERS 1 THRU 4

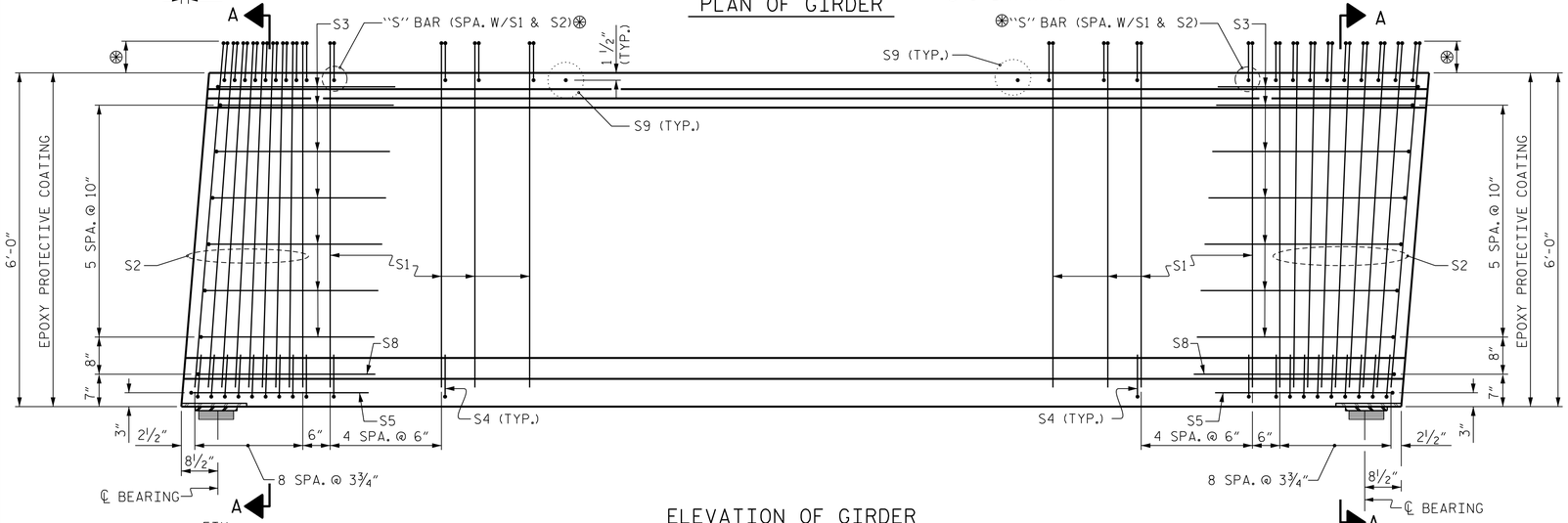

ELEVATION OF GIRDER

(SEE PARTIAL ELEVATION(S) FOR ADDITIONAL "S" BARS)

FOR 1½" Ø FORMED HOLE LOCATION, SEE "FRAMING PLAN" SHEET

⊛FOR STIRRUP PROJECTIONS, SEE SHEET 2 OF 3.

PROJECT NO. R-5771

HENDERSON COUNTY

STATION: 20+77.50 -L-

SHEET 1 OF 3

STATE OF NORTH CAROLINA
DEPARTMENT OF TRANSPORTATION
RALEIGH

SUPERSTRUCTURE

72" PRESTRESSED CONCRETE MODIFIED BULB TEE CONTINUOUS FOR LIVE LOAD

NORTH CAROLINA PROFESSIONAL SEAL 027799 ENGINEER ALLYSON K. ORR
3/27/2017

DOCUMENT NOT CONSIDERED FINAL UNLESS ALL SIGNATURES COMPLETED

MI ENGINEERING
1011 SCHAUB DRIVE, SUITE 100
RALEIGH, NC 27606
(919) 851-6606
FIRM PE NUMBER : P-0671

REVISIONS						
NO.	BY:	DATE:	NO.	BY:	DATE:	
1			3			
2			4			

SHEET NO. S-9

TOTAL SHEETS 29

STD. NO. PCG8

ASSEMBLED BY:	B.E. LANNING	DATE:	01/17
CHECKED BY :	A.K. ORR	DATE:	01/17
DESIGN ENGINEER OF RECORD:	A.K. ORR	DATE:	03/17
DRAWN BY :	EEM 2/6/97	REV. 10/1/11	MAA/GM
CHECKED BY :	VAP 2/6/97	REV. 6/13	MAA/GM
		REV. 1/15	MAA/TMG

3/27/2017
2:14:03 PM
User: blanning
Filename: P:\NC Bridges\MI6002_MA_R-5771 Br. Repl. (Div. 14)\R-5771\Structures\401_01T_R5771_SMU_PCG1.dgn