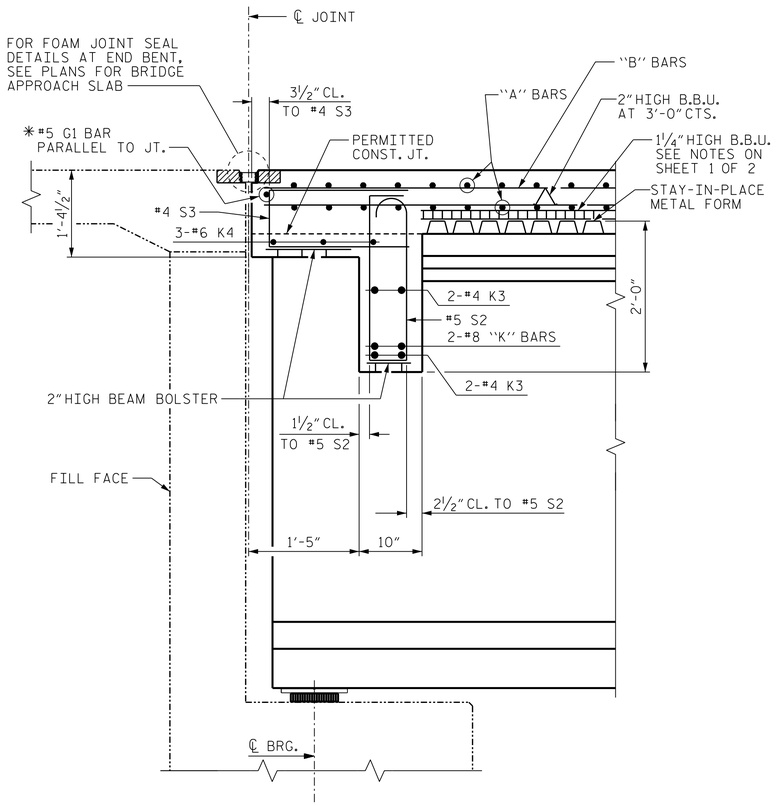

SECTION A-A

✳ #5 G1 BAR MAY BE SHIFTED SLIGHTLY, AS NECESSARY, TO CLEAR REINFORCING STEEL AND STIRRUPS.

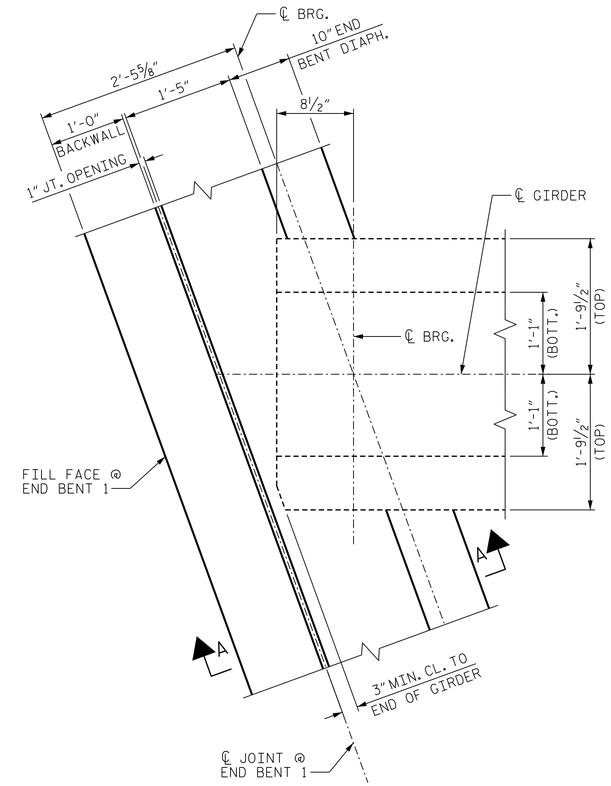

PLAN OF GIRDER AT END BENT JOINT

END BENT 1 SHOWN, END BENT 2 SIMILAR

PROJECT NO. R-5771

HENDERSON COUNTY

STATION: 20+77.50 -L-

SHEET 2 OF 2

STATE OF NORTH CAROLINA
DEPARTMENT OF TRANSPORTATION
RALEIGH

SUPERSTRUCTURE

TYPICAL SECTION DETAILS

NORTH CAROLINA PROFESSIONAL ENGINEER SEAL 027799 ALLYSON K. ORR

3/27/2017

DOCUMENT NOT CONSIDERED FINAL UNLESS ALL SIGNATURES COMPLETED

MI ENGINEERING
1011 SCHAUB DRIVE, SUITE 100
RALEIGH, NC 27606
(919) 851-6606
FIRM PE NUMBER : P-0671

REVISIONS						
NO.	BY:	DATE:	NO.	BY:	DATE:	
1			3			
2			4			

SHEET NO. S-6

TOTAL SHEETS 29

DRAWN BY :	B.E. LANNING	DATE :	01/17
CHECKED BY :	A.K. ORR	DATE :	01/17
DESIGN ENGINEER OF RECORD :	A.K. ORR	DATE :	03/17

3/27/2017
2:13:56 PM
User: blanning
Filename: P:\NC Bridges\M16002_MA_R-5771 Br. Repl. (Div. 14)\R-5771\Structures\401_011_R5771_SMU_TS2.dgn