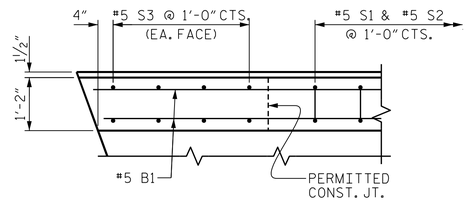

PLAN OF PARAPET

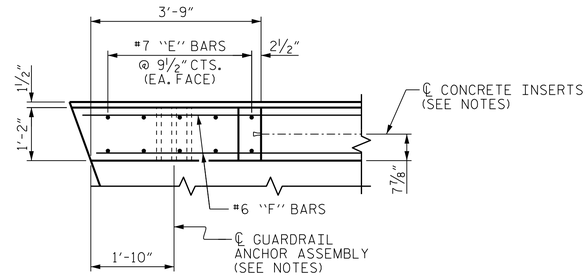

PLAN OF END POST

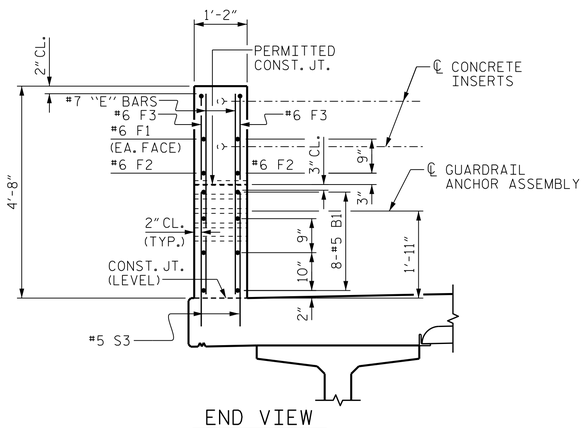

END VIEW

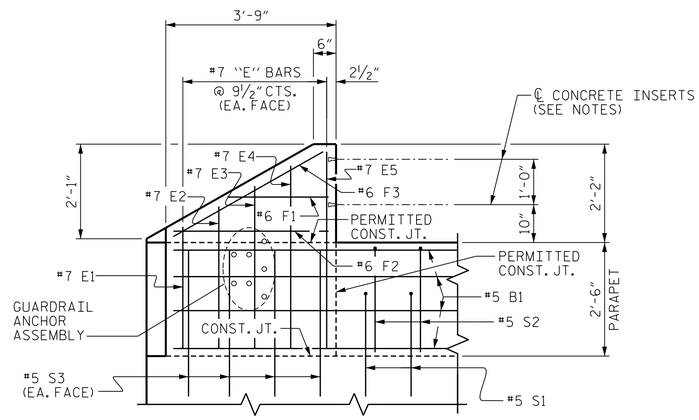

ELEVATION

PARAPET AND END POST FOR TWO BAR RAIL

END BENT 1 SHOWN, END BENT 2 SIMILAR

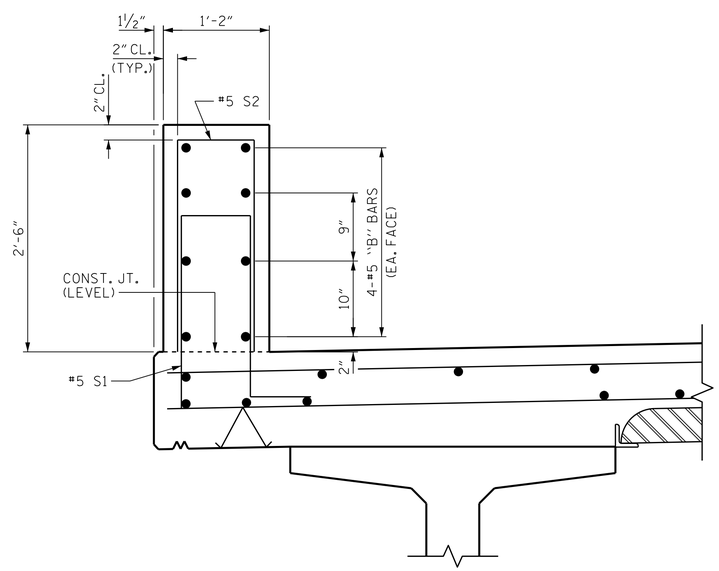

SECTION THRU PARAPET

NOTES

THE PARAPET SHALL NOT BE CAST UNTIL ALL SLAB CONCRETE HAS BEEN CAST AND HAS REACHED A MINIMUM COMPRESSIVE STRENGTH OF 3,000 PSI.

ALL REINFORCING STEEL IN PARAPET AND END POSTS SHALL BE EPOXY COATED.

FOR DETAILS OF CONCRETE INSERTS IN END POSTS, SEE "RAIL POST SPACINGS AND END OF RAIL DETAILS" SHEET.

THE #5 S1 AND #5 S2 BARS MAY BE SHIFTED SLIGHTLY IN ORDER TO MAINTAIN A 2" MIN. CLEARANCE TO THE ½" EXPANSION JOINT MATERIAL IN PARAPET.

GROOVED CONTRACTION JOINTS, ½" IN DEPTH, SHALL BE TOOLED IN ALL EXPOSED FACES OF THE PARAPET IN ACCORDANCE WITH ARTICLE 825-10(B) OF THE STANDARD SPECIFICATIONS. THE CONTRACTION JOINTS SHALL BE LOCATED AT A SPACING OF 8 FEET TO 10 FEET BETWEEN EXPANSION JOINTS. NO CONTRACTION JOINTS WILL BE REQUIRED FOR SEGMENTS LESS THAN 10 FEET IN LENGTH.

FOR DETAILS AND LOCATION OF GUARDRAIL ANCHOR ASSEMBLIES, SEE "GUARDRAIL ANCHORAGE DETAILS FOR METAL RAILS" SHEETS.

THE JOINT AT ENDS OF DECK SHALL BE SAWED PRIOR TO THE CASTING OF THE PARAPET.

THE #5 S3 BARS SHALL BE INSTALLED USING AN ADHESIVE ANCHORING SYSTEM. AFTER SAWING THE JOINT, THE YIELD LOAD FOR THE #5 S3 BARS IS 18.6 KIPS. FIELD TESTING FOR THE ADHESIVE BONDING SYSTEM IS NOT REQUIRED.

BILL OF MATERIAL

PARAPET AND END POSTS

BAR	NO.	SIZE	TYPE	LENGTH	WEIGHT
✳B1	64	#5	STR	15'-1"	1007
✳B2	48	#5	STR	24'-7"	1231
✳E1	8	#7	STR	2'-6"	41
✳E2	8	#7	STR	3'-0"	49
✳E3	8	#7	STR	3'-6"	57
✳E4	8	#7	STR	4'-0"	65
✳E5	8	#7	STR	4'-4"	71
✳F1	8	#6	STR	2'-0"	24
✳F2	8	#6	STR	3'-4"	40
✳F3	8	#6	STR	3'-8"	44
✳S1	240	#5	1	5'-5"	1356
✳S2	240	#5	2	5'-6"	1377
✳S3	32	#5	STR	3'-0"	100

✳EPOXY COATED REINFORCING STEEL	5,462	LBS.
CLASS AA CONCRETE	28.6	C. Y.
1'-2" x 2'-6" CONCRETE PARAPET	256.07	LIN. FT.

BAR TYPE

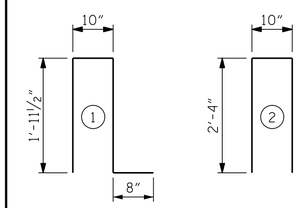

ALL BAR DIMENSIONS ARE OUT TO OUT.

PROJECT NO. R-5771

HENDERSON COUNTY

STATION: 20+77.50 -L-

SHEET 2 OF 2

STATE OF NORTH CAROLINA
DEPARTMENT OF TRANSPORTATION
RALEIGH

SUPERSTRUCTURE

END POSTS & PARAPET DETAILS

NORTH CAROLINA PROFESSIONAL SEAL 027799 ENGINEER ALLYSON K. ORR
3/27/2017

DOCUMENT NOT CONSIDERED FINAL UNLESS ALL SIGNATURES COMPLETED

MI ENGINEERING
1011 SCHAUB DRIVE, SUITE 100
RALEIGH, NC 27606
(919) 851-6606
FIRM PE NUMBER : P-0671

REVISIONS							SHEET NO.
NO.	BY:	DATE:	NO.	BY:	DATE:		S-14
1			3				TOTAL SHEETS
2			4				29

DRAWN BY :	B.E. LANNING	DATE :	01/17
CHECKED BY :	A.K. ORR	DATE :	01/17
DESIGN ENGINEER OF RECORD :	A.K. ORR	DATE :	03/17

3/27/2017
2:14:14 PM
User: blanning
Filename: P:\NC Bridges\MI6002_MA_R-5771 Br. Repl. (Div. 14)\R-5771\Structures\401_027_R5771_SMU_CP2.dgn