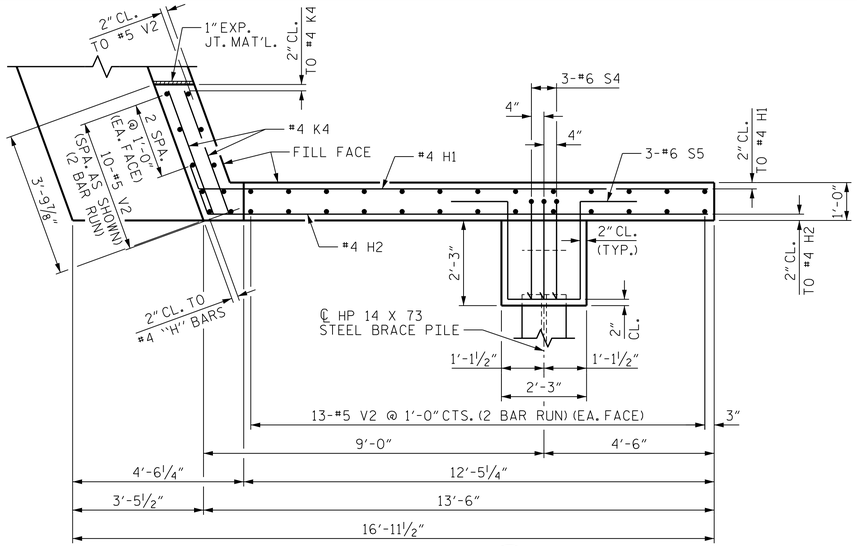

PLAN OF WING (W1)

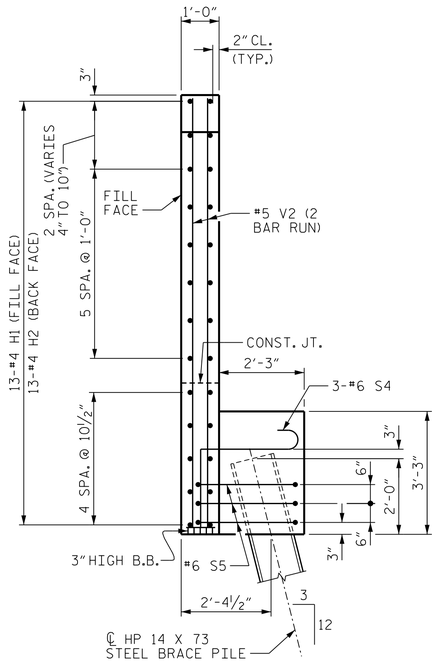

SECTION E-E

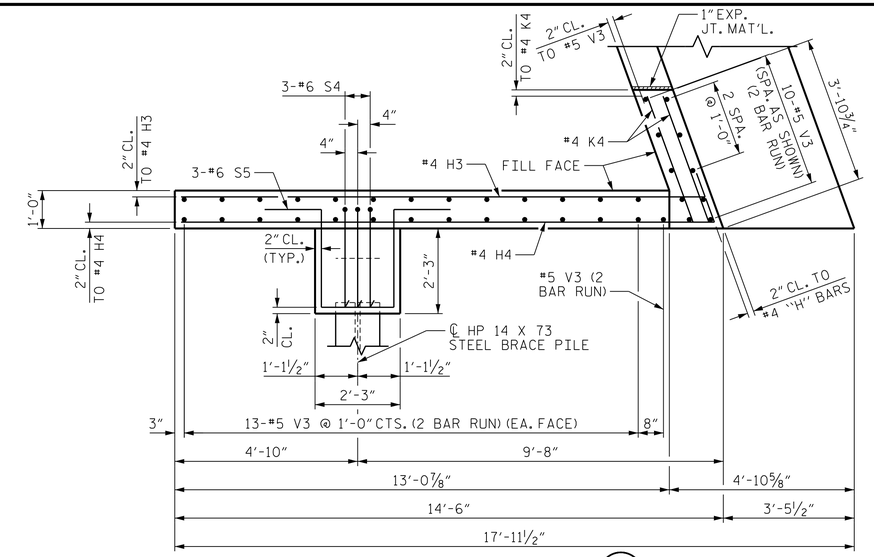

PLAN OF WING (W2)

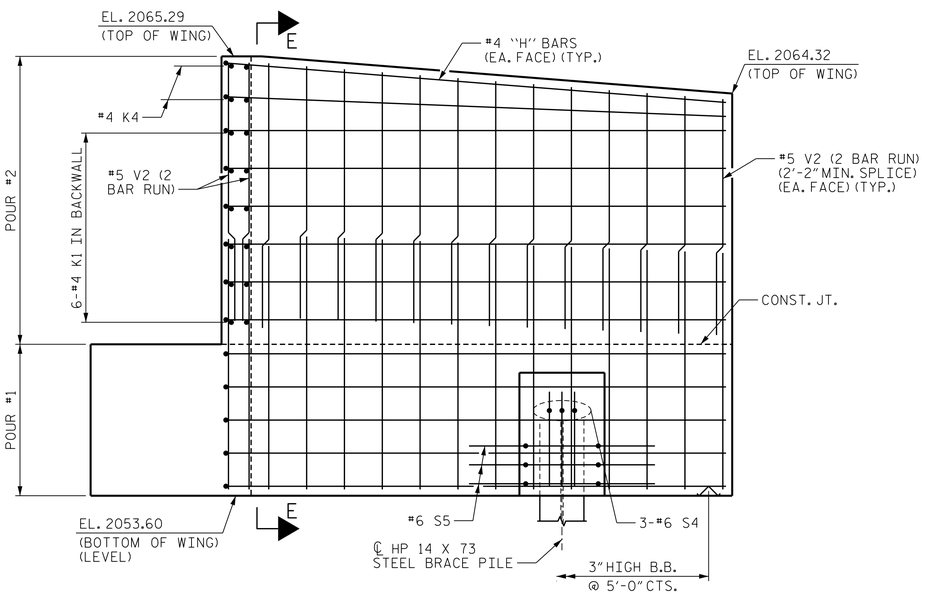

ELEVATION OF WING (W1)

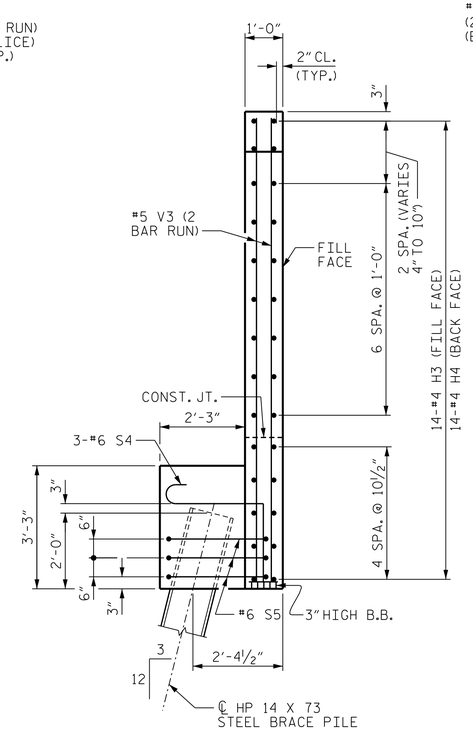

SECTION F-F

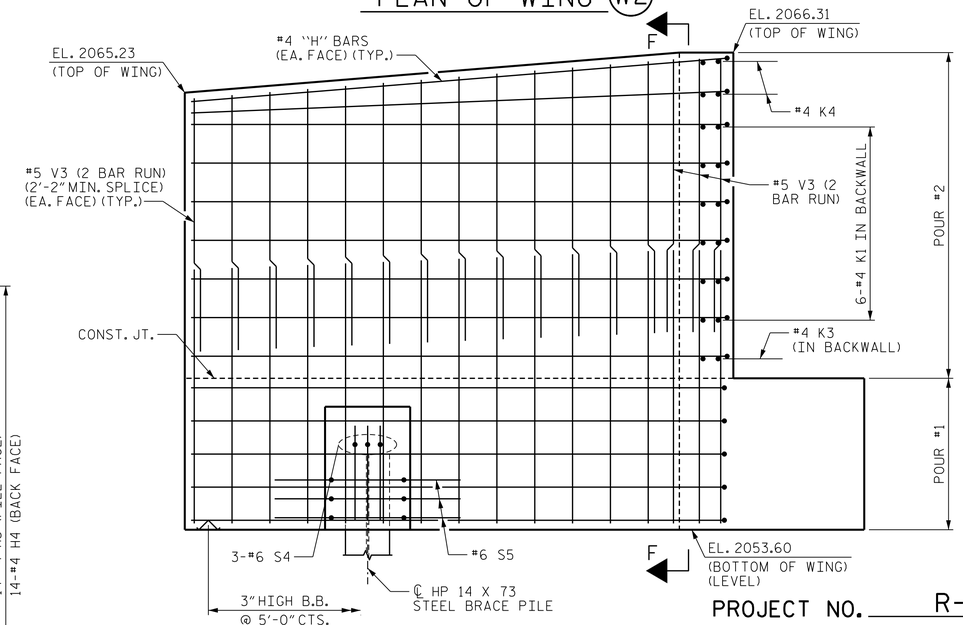

ELEVATION OF WING (W2)

PROJECT NO. R-5771

HENDERSON COUNTY

STATION: 20+77.50 -L-

SHEET 2 OF 3

STATE OF NORTH CAROLINA
DEPARTMENT OF TRANSPORTATION
RALEIGH

SUBSTRUCTURE

END BENT 1
WING DETAILS

NORTH CAROLINA PROFESSIONAL SEAL 027799 ENGINEER ALLYSON K. ORR
3/27/2017

DOCUMENT NOT CONSIDERED FINAL UNLESS ALL SIGNATURES COMPLETED

MI ENGINEERING
1011 SCHAUB DRIVE, SUITE 100
RALEIGH, NC 27606
(919) 851-6606
FIRM PE NUMBER : P-0671

REVISIONS						
NO.	BY:	DATE:	NO.	BY:	DATE:	
1			3			
2			4			

SHEET NO. S-21
TOTAL SHEETS 29

DRAWN BY : B.E. LANNING DATE : 02/17
CHECKED BY : A.K. ORR DATE : 02/17
DESIGN ENGINEER OF RECORD : A.K. ORR DATE : 03/17

3/27/2017
2:14:30 PM
User: blanning
Filename: P:\NC Bridges\MI6002_MA_R-5771 Br. Repl. (Div. 14)\R-5771\Structures\401_041_R5771_SMU_EIB.dgn